TRANE®

Split System Heat Pump Product Data

XL20i

4TWZ0024, 036, 048 & 060
with ComfortLink™ II and Charge Assist™

2, 3, 4 & 5 Tons

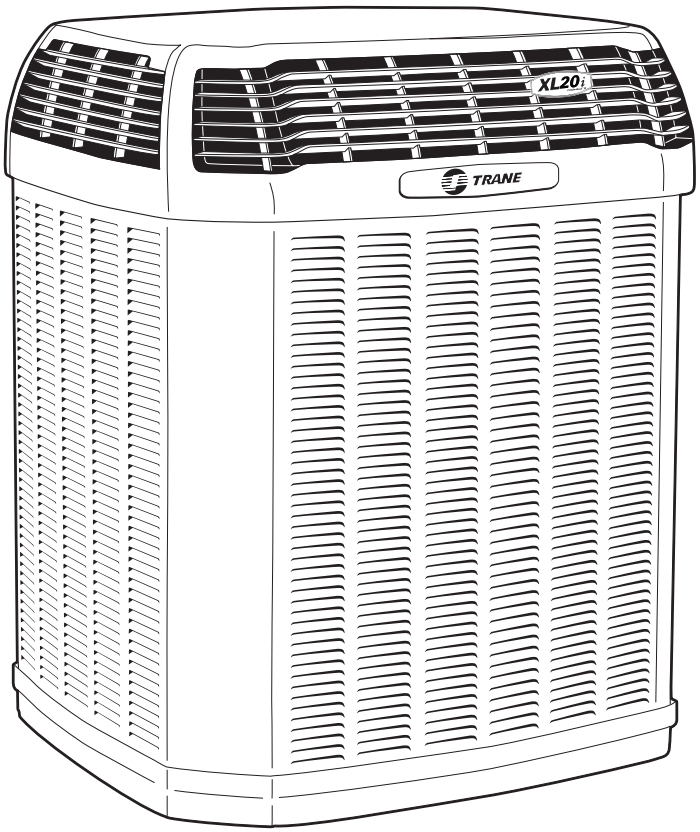

PUB. NO. 22-1286-08

Features and Benefits

- Two **CLIMATUFF®** compressors deliver 50% and 100% capacity modulation
- Efficiency up to **19.0 SEER** and **9.0 HSPF**
- All aluminum **SPINE FIN™** coil
- **WEATHERGUARD™ II** top shields unit
- **WEATHERGUARD™** fasteners
- **QUICK-SESS™** cabinet, service access and refrigerant connections with full coil protection
- **DURATUFF™** base, fast complete drain, weather proof
- **COMFORT-R™** mode approved
- **COMFORTLINK™ II** system, only two wire control connection
- **CHARGE ASSIST™** fast/accurate charging every time
- Glossy corrosion resistant finish
- Internal compressor high/low pressure & temperature protection
- Start kit standard
- 50% or 100% capacity modulation
- Compressor sump heat
- Electronic compressor control
- Liquid line filter/drier
- Tarpaulin gray cabinet with anthracite gray top
- Low sound with advanced fan system and compressor sound insulator
- Variable speed fan motor
- Electronic Expansion Valve with diagnostics
- Demand Defrost Control with diagnostics
- XL Seacoast shield
- Service valve cover
- R-410A refrigerant
- S.E.E.T. design testing
- 100% line run test
- Low ambient cooling to 55°F as shipped

- **Extended warranties available**

© 2011 Trane

Contents

Features and Benefits 2

General Data 4

- Product Specifications 4
- A-weighted Sound Power Level [dB(A)] 4
- Accessory Description and Usage 5
- ARI Standard Capacity Rating Conditions 5

Model Nomenclature 6

Electrical Data 7

Dimensions 10

Mechanical Specification Options 11

General Data

Product Specifications

Model No. ①	4TWZ0024A1	4TWZ0036B1	4TWZ0048A1	4TWZ0060A1
Electrical Data V/Ph/Hz ②	200/230/1/60	208/230/1/60	200/230/1/60	200/230/1/60
Min Cir Ampacity	14	20	26	31
Max Fuse Size (Amps)	20	30	40	50
Compressors	2 - CLIMATUFF®	2 - CLIMATUFF®	2 - CLIMATUFF®	2 - CLIMATUFF®
RL AMPS - LR AMPS	8.7 - 58	13.7 - 60.0	18.6 - 93.4	23.4 - 128.7
Outdoor Fan FL Amps	2.80	2.80	2.80	2.80
Fan HP	1/3	1/3	1/3	1/3
Fan Dia (inches)	27.5	27.6	26.6	26.6
Coil	Spine Fin™	Spine Fin™	Spine Fin™	Spine Fin™
Refrigerant R-410A	10/1-LB/OZ	11/2-LB/OZ	16/12-LB/OZ	15/13-LB/OZ
Line Size - (in.) O.D. Gas ③	5/8	3/4	3/4	3/4
Line Size - (in.) O.D. Liquid ③	3/8	3/8	3/8	3/8
Dimensions H x W x D (Crated)	57.4 x 35.1 x 38.7	57.4 x 35.1 x 38.7	57.4 x 35.1 x 38.7	57.4 x 35.1 x 38.7
Weight - Shipping	390	395	480	480
Weight - Net	340	345	430	430
Start Components	YES	YES	YES	YES
Sound Enclosure	YES	YES	YES	YES
Compressor Sump Heat	YES	YES	YES	YES
Optional Accessories: ④				
Rubber Isolator Kit	BAYISLT101	BAYISLT101	BAYISLT101	BAYISLT101
Snow Leg - Base & Cap 4" High	BAYLEGS002	BAYLEGS002	BAYLEGS002	BAYLEGS002
Snow Leg - 4" Extension	BAYLEGS003	BAYLEGS003	BAYLEGS003	BAYLEGS003
Extreme Condition Mounting Kit	BAYECMT023	BAYECMT004	BAYECMT004	BAYECMT004
Vertical Discharge Air Kit Base 4	BAYVDTA003	BAYVDTA004	BAYVDTA004	BAYVDTA004
Auto Charge Solenoid Kit	BAYCAKT001	BAYCAKT001	BAYCAKT001	BAYCAKT001
24 Volt Wiring Harness	BAYACHP024A	BAYACHP024A	BAYACHP024A	BAYACHP024A
Refrigerant Lineset ⑤	TAYREFLN9*	TAYREFLN7*	TAYREFLN7*	TAYREFLN7*

① Certified in accordance with the Air-Source Unitary Heat Pump Equipment certification program which is based on AHRI Standard 210/240.
② Calculated in accordance with N.E.C. Only use HACR circuit breakers or fuses.
③ Standard line lengths - 80'. Standard lift - 25' Suction and Liquid line.
For Greater lengths and lifts refer to refrigerant piping software Pub# 32-3312-0†. (†denotes latest revision)
④ For accessory description and usage, see page 5.
⑤ * = 15, 20, 25, 30, 40 and 50 foot lineset available.

A-weighted Sound Power Level [dB(A)]

MODEL	SOUND POWER LEVEL [dB(A)]		A-WEIGHTED FULL OCTAVE SOUND POWER LEVEL dB - [dB(A)] High Stage							
	Low Stage Overall	High Stage Overall	63	125	250	500	1000	2000	4000	8000
4TWZ0024A1	62	70	51.4	52.3	60.1	61.8	63.7	64.9	56.6	50
4TWZ0036B1	70	72	51.3	55.5	66.2	65.3	64.9	64.7	57.9	53.6
4TWZ0048A1	71	76	51.3	55.8	68.2	68.5	69.5	72	58	50.9
4TWZ0060A1	71	76	50	58.2	66.3	70	70.1	70.8	60.7	52.4

Note: Rated in accordance with AHRI Standard 270-2008

General Data

Accessory Description and Usage

24 Volt Wiring Harness — Used to wire a communicating outdoor unit to an existing 24 Volt indoor section.

Charge Assist™ Solenoid Kit — fast/accurate charging every time.

Rubber Isolators — 5 large rubber donuts to isolate condensing unit from transmitting energy into mounting frame or pad. Use on any application where sound transmission needs to be minimized.

Extreme Condition Mount Kit — Bracket kits to securely mount condensing unit to a frame or pad without removing any panels. Use in areas with high winds, or on commercial roof tops, etc.

Low Ambient Cooling — For low ambient cooling below 55° see Application Guide SSC-APG005-EN.

AHRI Standard Capacity Rating Conditions

AHRI STANDARD 210/240 RATING CONDITIONS —
(A) Cooling 80°F DB, 67°F WB air entering indoor coil, 95°F DB air entering outdoor coil.
(B) High Temperature Heating 47°F DB, 43°F WB air entering outdoor coil, 70°F DB air entering indoor coil.
(C) Low Temperature Heating 17°F DB, 15°F WB air entering outdoor coil, 70°F DB air entering indoor coil.
(D) Rated indoor airflow for heating is the same as for cooling.

AHRI STANDARD 270 RATING CONDITIONS — (Noise rating numbers are determined with the unit in cooling operation.) Standard Noise Rating number is at 95°F outdoor air.

Model Nomenclature

Outdoor Units

4 T W Z 0 0 3 6 A 1 0 0 0 A A

Refrigerant Type
2 = R-22
4 = R-410A

TRANE

Product Type
W = Split Heat Pump
T = Split Cooling

Product Family
Z = Leadership – Two Stage
X = Leadership
R = Replacement/Retail
B = Basic
A = Light Commercial

Family SEER
0 = 10 3 = 13 6 = 16
1 = 11 4 = 14 8 = 18
2 = 12 5 = 15 9 = 19

Split System Connections 1-6 Tons
0 = Brazed

Nominal Capacity in 000s of BTUs

Major Design Modifications

Power Supply
1 = 200-230/1/60 or 208-230/1/60
3 = 200-230/3/60
4 = 460/3/60

Secondary Function

Minor Design Modifications

Unit Parts Identifier

Gas Furnaces

T U D 2 B 0 8 0 A C V 3 2 A A

Furnace Configuration
TU = Upflow/Horizontal
TD = Downflow/Horizontal

Type
E = 80% Induced Draft Standard
D = 80% Induced Draft Premium
C = 90% Condensing Standard
X = 90% Condensing Premium
H = 95% Condensing Premium

Number of Heating Stages
1 = Single Stage
2 = Two Stage
3 = Three Stage

Cabinet Width
A = 14.5" Cabinet Width
B = 17.5" Cabinet Width
C = 21.0" Cabinet Width
D = 24.5" Cabinet Width

Heating Input
080 = 80,000 MBTUH

Major Design Change

Voltage
9 = 115 Volts / 60 Hertz / Natural Gas
A = 115 Volts / 50 Hertz / Natural Gas
C = 115 Volts / Natural Gas with Communicating System Control
F = 115 Volts / Natural Gas with Integrated Electronic Filter
D = 115 Volts / Natural Gas with Communicating System Control and Integrated Electronic Filter

Air Capacity for Cooling
36 = 3 Ton Standard PSC Motor
H3 = 3 Ton High Efficiency Motor
V3 = 3 Ton Variable Speed Motor

Draft Inducer Speeds
1 = Single Speed
2 = Two Speed
V = Variable Speed

Minor Design Change

Service Digit - Not Orderable

Air Handlers-Residential

1 2 3 4 5 6 7 8 9 10 11 12 13 14 15
4 T E E 3 C 0 1 A 1 0 0 0 A A

Refrigerant Type
4 = R-410A

Application
TE = Fully Convertible
TG = Semi Convertible
TF = Front Return

Product Family
E = Leadership - Variable Speed
H = High Efficiency
C = Replacement/Retail
B = Basic

Flow Control
3 = TXV–Non-bleed

Feature Indentifier
0 = Standard Unit
F = Air-Tite™
C = Communicating Air Handler
D = Communicating with Intergated Whole Home Air Cleaner

Model Number Capacity Distinguisher

Major Design Change

Power Supply
1 = Single Phase

Electrical Connection
0 = Pig Tails
B = Circuit Breaker
D = Pull Disconnect

Future Option - Factory Installed Heater Nominal KW Value

Minor Design Change

Service Digit - Not Orderable

Coils – Residential

4 T X C B 0 0 1 C C 3 H C A A

Refrigerant Type
4 - R410A

Product Family
T-Premium
(Heat Pump or Convertible Coil)

Coil Design
X - Direct Expansion Evaporator Coil

Product Family
C - Cased A Coil
A - Uncased A Coil
F - Cased Horizontal Flat Coil

Coil Width (Cased/Uncased)
A - 14.5" / 13.3"
B - 17.5" / 16.3"
C - 21.0" / 19.8"
D - 24.5" / 23.3"
H - 10.5"

Refrigerant Line Coupling
0 - Brazed

Model Number Distinguisher

Major Design Change

Efficiency
C - Standard
S - Hi Efficiency (Derived from 10 SEER products)

Refrigerant Control
3 - TXV - Non-Bleed

Coil Circuitry
H - Heat Pump

Airflow Configuration
A - Upflow Only
U - Upflow / Downflow
H - Horizontal Only
C - Convertible - Upflow, Downflow, Left or Right Airflow

Minor Design Change

Unit Parts Identifier

Electrical Data

Schematic Diagrams

(SEE LEGEND)

4TWZ0024, 4TWZ0036, 4TWZ0048, 4TWZ0060

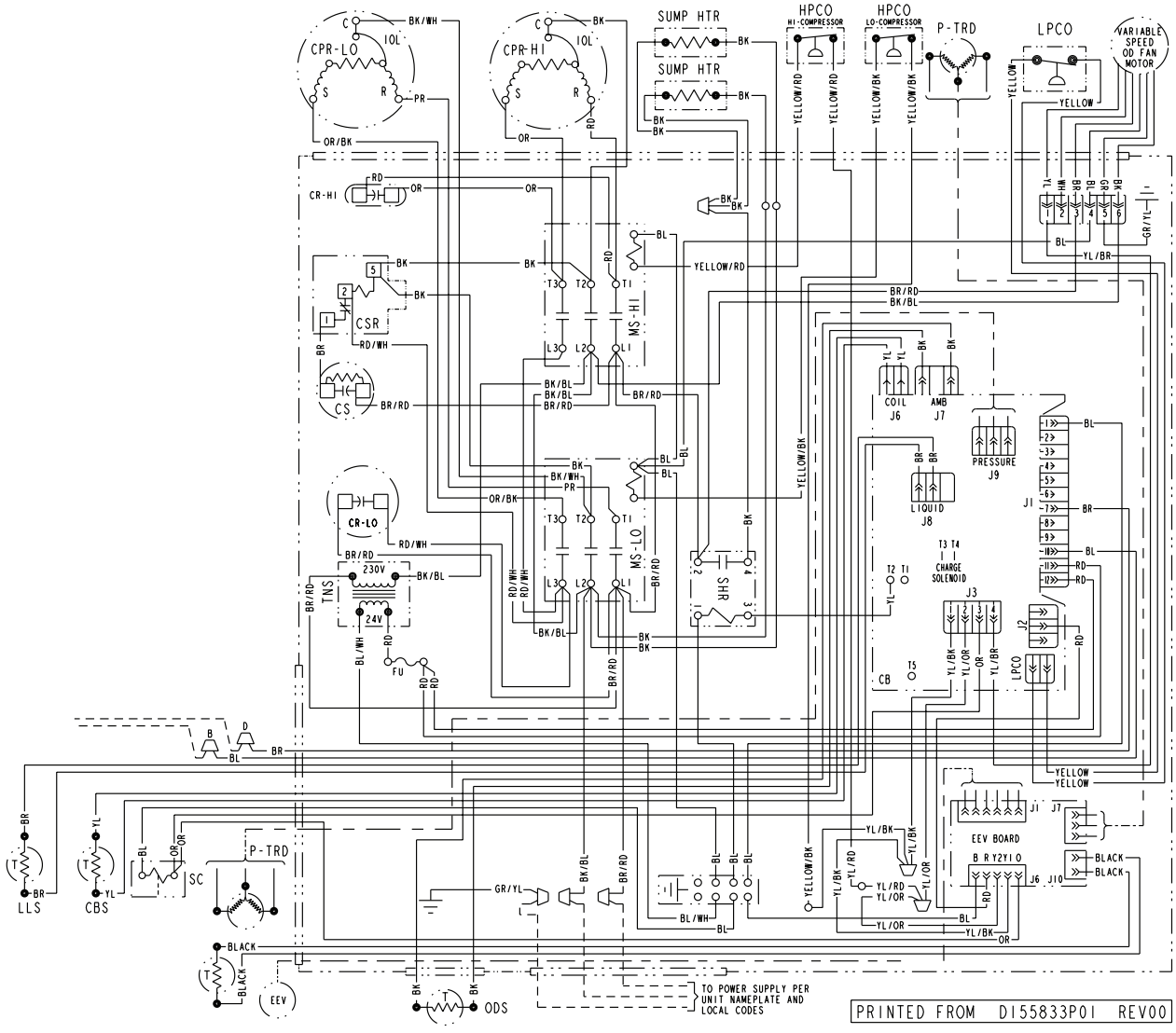

Electrical Data

Schematic Diagrams

(SEE LEGEND)

4TWZ0024, 4TWZ0036, 4TWZ0048, 4TWZ0060

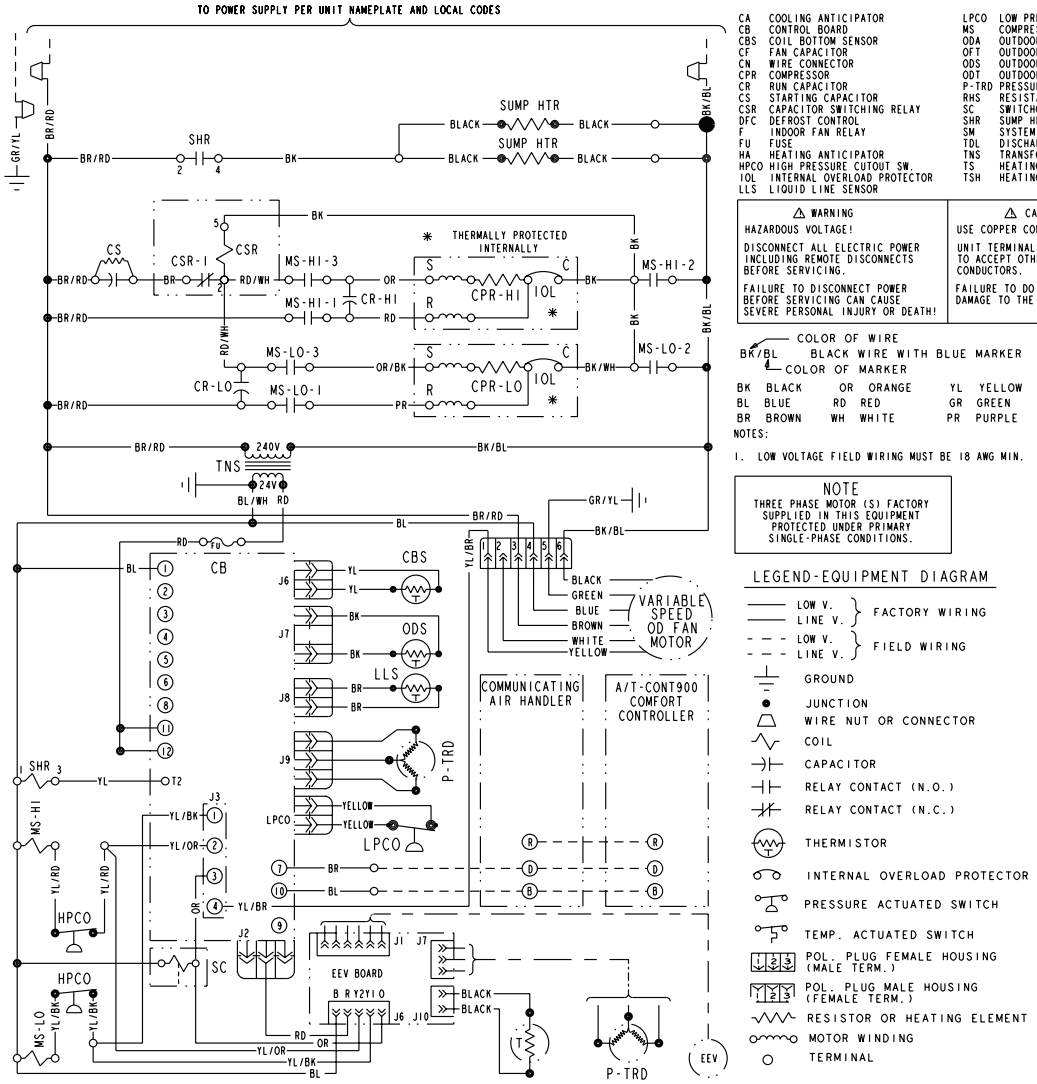

CA	COOLING ANTICIPATOR	LPCO	LOW PRESSURE CUTOUT SW.
CB	CONTROL BOARD	MS	COMPRESSOR MOTOR CONTACTOR
CBS	COIL BOTTOM SENSOR	ODA	OUTDOOR ANTICIPATOR
CF	FAN CAPACITOR	OFT	OUTDOOR FAN THERMOSTAT
CN	WIRE CONNECTOR	ODS	OUTDOOR TEMPERATURE SENSOR
CPR	COMPRESSOR	ODT	OUTDOOR THERMOSTAT
CR	RUN CAPACITOR	P-TRD	PRESSURE TRANSDUCER
CS	STARTING CAPACITOR	RHS	RESISTANCE HEAT SWITCH
CSR	CAPACITOR SWITCHING RELAY	SC	SWITCHOVER VALVE SOLENOID
DFC	DEFROST CONTROL	SHR	SUMP HEAT RELAY
F	INDOOR FAN RELAY	SM	SYSTEM "ON-OFF" SWITCH
FU	FUSE	TDL	DISCHARGE LINE THERMOSTAT
HA	HEATING ANTICIPATOR	TNS	TRANSFORMER
HPCO	HIGH PRESSURE CUTOUT SW.	TS	HEATING-COOLING THERMOSTAT
IOL	INTERNAL OVERLOAD PROTECTOR	TSH	HEATING THERMOSTAT
LLS	LIQUID LINE SENSOR		

⚠ WARNING

HAZARDOUS VOLTAGE!

DISCONNECT ALL ELECTRIC POWER INCLUDING REMOTE DISCONNECTS BEFORE SERVICING.

FAILURE TO DISCONNECT POWER BEFORE SERVICING CAN CAUSE SEVERE PERSONAL INJURY OR DEATH!

⚠ CAUTION

USE COPPER CONDUCTORS ONLY!

UNIT TERMINALS ARE NOT DESIGNED TO ACCEPT OTHER TYPES OF CONDUCTORS.

FAILURE TO DO SO MAY CAUSE DAMAGE TO THE EQUIPMENT!

COLOR OF WIRE
BK/BL BLACK WIRE WITH BLUE MARKER
COLOR OF MARKER

BK	BLACK	OR	ORANGE	YL	YELLOW
BL	BLUE	RD	RED	GR	GREEN
BR	BROWN	WH	WHITE	PR	PURPLE

NOTES:

1. LOW VOLTAGE FIELD WIRING MUST BE 18 AWG MIN.

NOTE
THREE PHASE MOTOR (S) FACTORY SUPPLIED IN THIS EQUIPMENT PROTECTED UNDER PRIMARY SINGLE-PHASE CONDITIONS.

LEGEND-EQUIPMENT DIAGRAM

- LOW V. / LINE V. — FACTORY WIRING
- LOW V. / LINE V. — FIELD WIRING
- GROUND
- JUNCTION
- WIRE NUT OR CONNECTOR
- COIL
- CAPACITOR
- RELAY CONTACT (N.O.)
- RELAY CONTACT (N.C.)
- THERMISTOR
- INTERNAL OVERLOAD PROTECTOR
- PRESSURE ACTUATED SWITCH
- TEMP. ACTUATED SWITCH
- POL. PLUG FEMALE HOUSING (MALE TERM.)
- POL. PLUG MALE HOUSING (FEMALE TERM.)
- RESISTOR OR HEATING ELEMENT
- MOTOR WINDING
- TERMINAL

Printed from D155833P01 Rev 00

Electrical Data

Schematic Diagrams

LEGEND

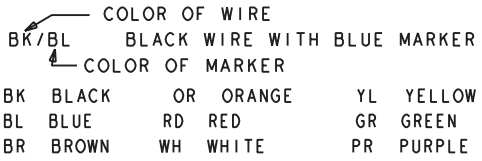

SYMBOLS

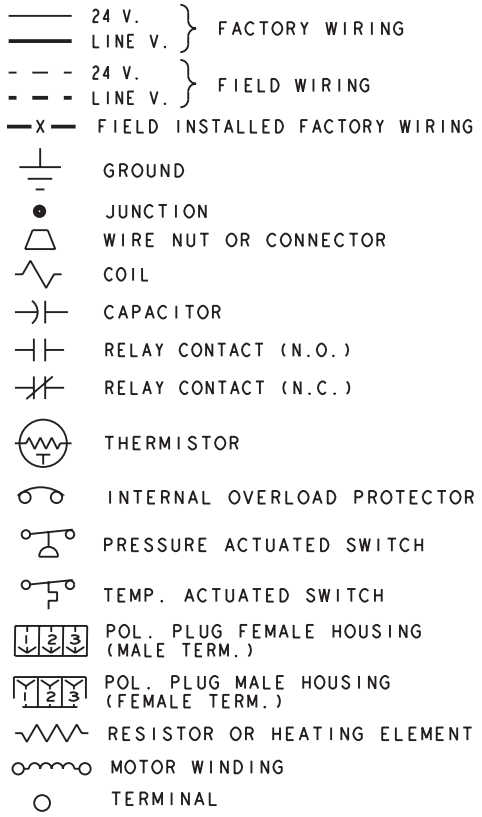

CA	COOLING ANTICIPATOR	LPCO	LOW PRESSURE CUTOUT SW.
CBS	COIL BOTTOM SENSOR	MS	COMPRESSOR MOTOR CONTACTOR
CF	FAN CAPACITOR	ODA	OUTDOOR ANTICIPATOR
CN	WIRE CONNECTOR	OFT	OUTDOOR FAN THERMOSTAT
CPR	COMPRESSOR	ODS	OUTDOOR TEMPERATURE SENSOR
CR	RUN CAPACITOR	ODT	OUTDOOR THERMOSTAT
CS	STARTING CAPACITOR	RHS	RESISTANCE HEAT SWITCH
CSR	CAPACITOR SWITCHING RELAY	SC	SWITCHOVER VALVE SOLENOID
DFC	DEFROST CONTROL	SM	SYSTEM "ON-OFF" SWITCH
F	INDOOR FAN RELAY	TDL	DISCHARGE LINE THERMOSTAT
HA	HEATING ANTICIPATOR	TNS	TRANSFORMER
HPCO	HIGH PRESSURE CUTOUT SW.	TS	HEATING-COOLING THERMOSTAT
IOL	INTERNAL OVERLOAD PROTECTOR	TSH	HEATING THERMOSTAT

Dimensions

4TWZ0 Outline Drawing

Note: All dimensions are in MM (Inches).

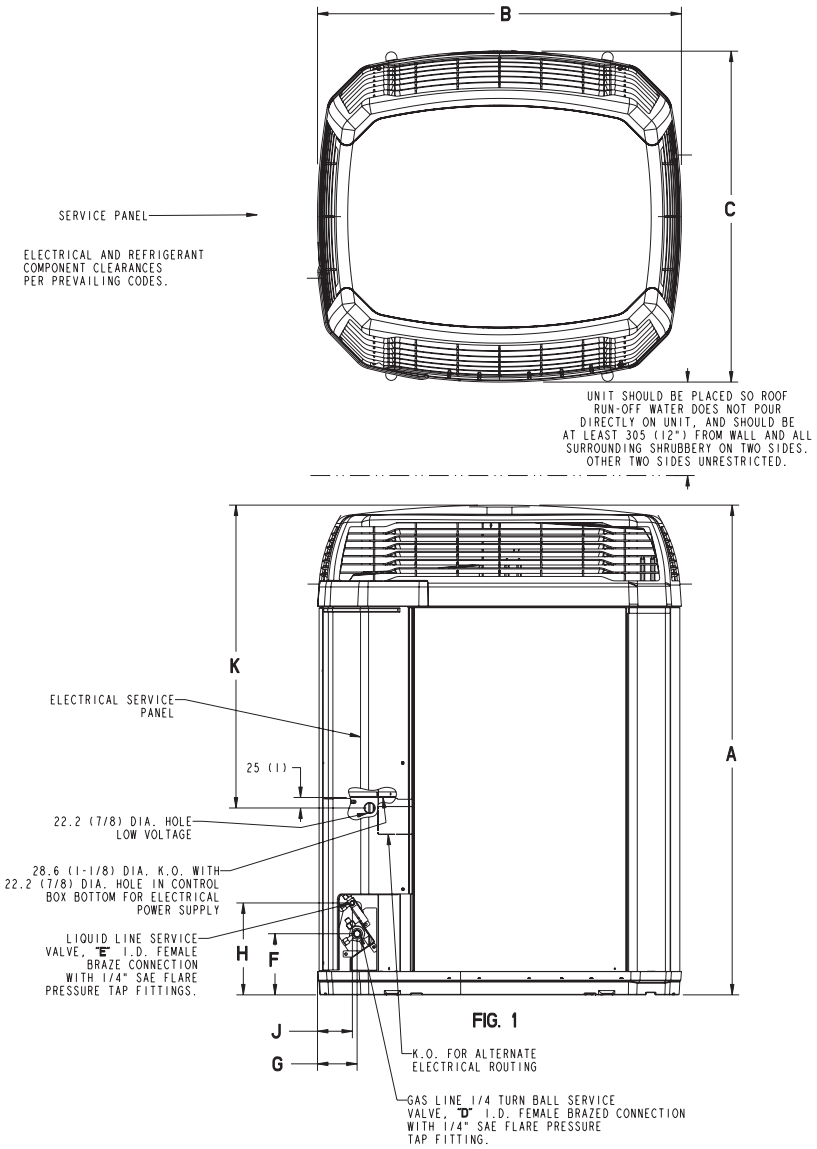

FIG. 1

MODELS	BASE	A	B	C	D	E	F	G	H	J	K
4TWZ0024A	4	1369 (53 7/8)	946 (37-1/4)	870 (34-1/4)	5/8	3/8	152 (6)	98 (3-7/8)	219 (8-5/8)	86 (3-3/8)	1035 (40 3/4)
4TWZ0036B 4TWZ0048A 4TWZ0060A	4	1369 (53 7/8)	946 (37-1/4)	870 (34-1/4)	3/4	3/8	152 (6)	98 (3-7/8)	219 (8-5/8)	86 (3-3/8)	1035 (40 3/4)

From Dwg. D152635 Rev. 15

Mechanical Specification Options

General
The 4TWZ0 is fully charged from the factory for matched indoor section and up to 15 feet of piping. This unit is designed to operate at outdoor ambient temperatures as high as 115°F. Cooling capacities are matched with a wide selection of air handlers and furnace coils that are A.R.I. certified. The unit shall be certified to UL 1995. Exterior is designed for outdoor application.

ComfortLink™ II
This outdoor unit contains the ComfortLink™ II digital communication with 2 wire connection to outdoor and Plug-n-Play set up.

Charge Assist™
The Charge Assist™ indicates system Charge Status.

Casing
Unit casing is constructed of heavy gauge, G60 galvanized steel and painted with a weather-resistant powder paint on all louvers, panels, prepaint on all other panels. Corrosion and weather-proof CMBP-G30 DuraTuff™ base.

Refrigerant Controls
Refrigeration system controls include condenser fan, compressor contactor and high and low pressure switches. High and low pressure controls are inherent to the compressor. A factory installed liquid line drier is standard.

Compressor
Two Climatuff® compressors deliver 50% or 100% capacity modulation and feature internal over temperature and pressure protection and total dipped hermetic motor. Other features include: roto lock suction and discharge refrigerant connections, centrifugal oil pump and low vibration and noise.

Condenser Coil
The outdoor coil provides low airflow resistance and efficient heat transfer. The coil is protected on all four sides by louvered.

Low Ambient Cooling
As manufactured, this unit has a cooling capability to 55°F. For low ambient cooling below 55° see Application Guide SSC-APG005-EN.

Comfort Control
ComfortLInk™ II Control with Plug-n-Play set up and 3 wire connection.

09/11

Trane
www.trane.com

***Trane** has a policy of continuous product and product data improvement **and** it reserves the right to change design and specifications without notice.*